CIV102H-1 F Structures and Materials

UNIVERSITY OF TORONTO
DEPARTMENT OF ENGINEERING SCIENCE

Bridge Design Report

2025-11-23

Names: Mina (Youyang) Wu, Shupei Zhang, Jingshu Zhu

TA: Junyan (Steven) Xiao

Table of Contents

Table of Contents 2
Introduction 3
The Bridge 4
Key Design Decisions 4
Major Iterations 6
Iteration 1: Square HSS (Excel) 6
Iteration 2: Adding Layers (Excel) 6
Iteration 3: height variations (MATLAB) 7
Iteration 4: width variations (MATLAB) 7
Iteration 5: I-shape Girder with Double Web (Excel) 7
Iteration 6: Variable height (Prototyping) 9
Iteration 7: Framed Box Girder with Discrete Square Cells 10
Iteration 8: Vertically Triangular Webs (Prototyping) 10
Final Design: 13
References 14
Appendix 14

Introduction

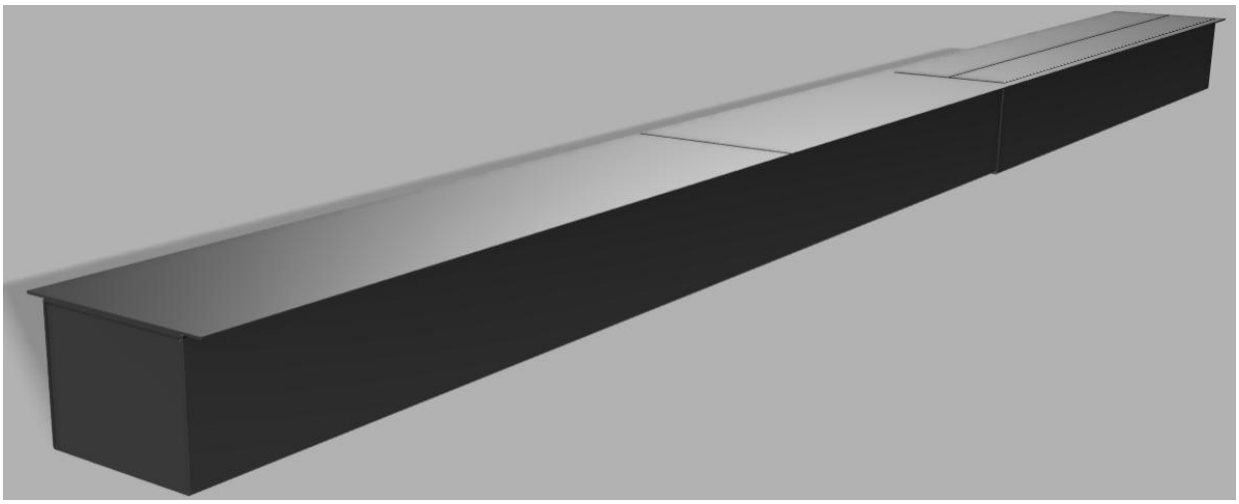

Figure 1: The final bridge design

This report will describe the reason behind the design decisions for our final design and the iterations we went through to arrive at the final design. The goal of the CIV102 Bridge Project is to construct a Matboard bridge capable of supporting at least 400N. There are some dimensional constraints, and a quotient between the supported load and self-weight is taken to determine the score. For our bridge, we wanted to design a bridge capable of supporting 1000N of weight, and we were ok with using up all the given material to build a stronger bridge.

The Bridge

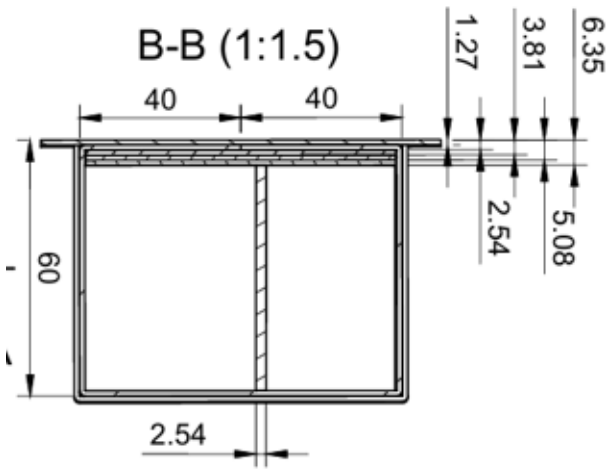

Figure 2: Dimensioned cross-section of bridge design.

Our bridge is a box girder bridge with a single splice at approximately 1/3 of the length. The cross-section seen in Figure 2 is 80mm wide and 60mm tall and has a 100mm wide deck on top. The bridge measures 1250mm in length, and both ends are capped with a diaphragm. Inside the bridge, a continuous zigzag comprised of 5 different pieces of Matboard was used as diaphragms (23 evenly spaced diaphragms at 60 degrees). 3 extra layers of matboard are adhered to the top surface from 205mm to 1045mm, 300mm to 950mm, and from 385 mm to 865mm. (Each section is centered on the bridge and spans the entire width.)

Key Design Decisions

Design Feature	**Reasoning**
Triangular infill	• Acts as 23 diaphragms • Doubles as additional area in cross section • Tested through physical prototypes
Additional top layers	• Strengthens bridge against compression yield (raises ybar) • Glued under deck to avoid interference with train • Lengths match shape of BMD.
Full width glue tabs	• Doubles as an extra layer • Easier geometry to calculate • Easier construction (everything folds to a flat surface)

60 mm height	• Next highest multiple of 20mm that does not exceed 80mm (impossible to withstand case 3 web buckling without adding layers if height exceeds 8mm)
80mm width with wider deck	• Shorter width allows material to be allocated elsewhere • Does not affect case 3 buckling
Single offset splice	• Minimum amount of splices • Placed as far from the middle (maximum moment) as possible

Major Iterations

Iteration 1: Square HSS (Excel)

If we want to consider the simplest cross-section possible, we can look at a square HSS since the requirements mandate the deck to be at least 100mm wide, we will take this to be the dimension of the HSS.

What we learned:

- The HSS has ybar at mid height. Since the yield stress for tension is 5 times greater than that for compression, the ideal height for the centroidal axis is 5/6 of the total height from the bottom (the top is in compression, while the bottom is in tension). This cross-section would lead to a FOS for tension that is always 5 times greater than compression, which is suboptimal. Therefore, an area should be added to the top of the cross-section to raise the y-bar as close as possible to 5/6 of the total height.
- The HSS has no diaphragms, making the webs very susceptible to case 3 local buckling and shear buckling.

Iteration 2: Adding Layers (Excel)

member	base	height	y (mm)	A (mm2)	ybar (mm)	I (mm4)	d (mm)	Ad^2 (mm4)	I total (mm4)
1	100.00	100.00	50.00	10000.00	50.00	8333333.33	0.00	0.00	814951.43
2	-97.46	97.46	50.00	-9498.45	50.00	-7518381.90	0.00	0.00	

top layers	1.00
ybot/I	6.14E-05
ytop/I	6.14E-05
ybot/5ytop	0.20

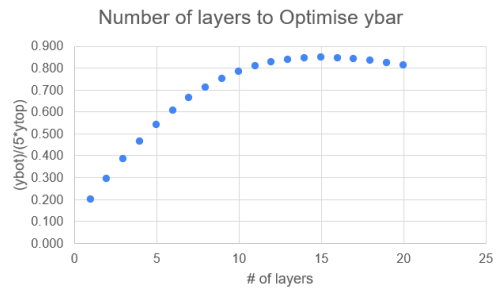

Figure 3: Using the Excel sheet, we plotted the number of layers against the ratio between y from the bottom and y from the top. For ideal yielding in tension and compression, 15 layers is the closest to 1 and therefore the best for a cross-section of height 100mm.

As seen from the graph in Figure 3, the "optimalness" of yielding in tension and compression does not increase linearly with the number of layers in the bridge (as layers of added, the centroid of each is lower each time, and contributes less to y-bar). Though 15 layers show the best behaviour, it does not use the material efficiently. While going from 1 layer to two increased the "optimalness" by 47%, 6 layers to 7 only increases it by about 9.5%.

What we learned:

- Though increasing layers at the top improves material behavior for yielding up to a point, it is inefficient to use so much material to reach this point.

Iteration 3: height variations (MATLAB)

Next, we looked at how varying the height affects factor of safeties associated with the bridge. Using the MATLAB code, we inserted different numbers (in multiples of 20 as per the requirement) and checked FOS. Most notably, as height increased, the FOS of yield due to compression increased while case 3 local buckling of the webs decreased.

What we learned:

Though increasing the total height will raise the y-bar, height is also inversely proportional to the FOS of local buckling. The only other way to prevent case 3 buckling of the web is to increase the thickness, which would use a lot of material. Through our MATLAB calculations, it was determined that to reach 1000 N, the height of the bridge should be less than 80mm.

Iteration 4: width variations (MATLAB)

Looking at the FOS of yield due to buckling when the height is below 80mm, we found that way too many layers would be needed to prevent this mode of failure. However, though the requirements say the deck must be at least 100mm wide, we can have it overhang the structural portion.

What we learned:

- When the width decreases, I decrease, and the FOS of yield increases. Because web dimensions don't change, web buckling is unaffected.
- Because the train is 75mm wide, we decided that a 10mm overhang on each side would be ok.

Iteration 5: I-shape Girder with Double Web (Excel)

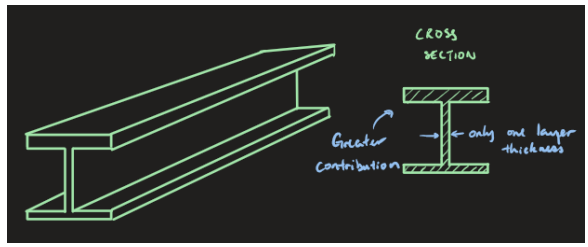

Figure 4: The isometric and cross-sectional view of an I beam. Notice that instead of two webs, there is only one, decreasing the area contribution of the middle portion of the cross-section.

Another classic cross-section in CIV102 is the I beam, seen in Figure 4. With the middle web having only one sheet of matboard as the thickness, the top flange would have a greater effect on the y-bar of the cross-section. Having two flanges also allows us to make the bottom flange much narrower, further increasing the y-bar.

To improve its second moment of inertia (I), we considered increasing the height of the bridge, according to the formula of I, $I = \frac{bh^3}{12}$. In the cross-section of the I-shape girder, we thought that the resistance to the bending moment near the mid span would be improved. The I-shape girder was composed of two triangular boxes and two plates, where the two boxes played the roles of top and

bottom flanges of the bridge, and the plates with the longest height were perpendicularly placed to the two flanges as the web of the bridge, where the height was the depth of the web. This design arranged most of the material at the top and bottom flanges, which were far away from the neutral axis of the girder, so the flanges would suffer the main tension and compression due to bending. Under the given materials, the second moment of inertia of an I-girder would be higher in general. For example, compared to a solid core girder, the I-girder could have a deeper depth of the girder with the same weight.

However, for the I-girder with double web, the risk of local buckling and shear buckling would be high. The webs were two thin and tall plates vertically placed. The slender webs in I-shaped beams easily caused local buckling, and the effective compression area of the webs would be reduced after the local buckling occurred, so that the bending capacity predicted according to the cross-sectional area might be larger than the real situation [1].

The upper part of the web was close to the top flange, which was inside the main compression region, so the upper part of the web had to suffer from a large compressive stress σ_x. This design lacked web stiffeners, and the space between the webs was empty.

As the top flange was a hollow box, the main pressure area still lacked supports, since the top surface of the girder was only a thin board. Because there was no valid design to distribute the pressure from the train, the top board was easily broken.

The lack of supporters or separators inside the webs raised the risk of shear buckling. As the valid anti-shear area was small, the actual shear capacity of the webs would be lower than expected, which was calculated by the formula of shear force V, $V = \tau A_{\text{web}}$, as A_{web} was considered according to the full web area. The webs always carried most of the shear force in most kinds of girders, and for slender webs, the shear buckling of the webs was the main factor of the shear resistance, but not the plastic shear strength of the material [2].

The shear force problem would also cause the potential issues of the glue joints, because some shear force bearing by the whole plates of webs in expectation would be sheared by glue joints which at the ledges of the webs, so the shear flow q on the glue joints would increase, according to the formula of q, $q = \frac{VQ}{I}$. Also, the webs and flanges were connected by the glue joints, so the shear force transferred from the flanges to the webs must pass by the glue joints, and the load of the glue joint might be much higher than expected.

By comparing the advantages and the disadvantages of the I-girder design, considering that shear and buckling were important factors for the pressure capacity of a bridge, the result of our discussion showed that this design did not satisfy our expectations for the best option, so we gave up this idea.

What we learned:

- The I beam is an excellent design if designed to withstand yielding, but in the case of a bridge, the spread out

loads from the wheels would apply a lot of torque on the top flanges of the beam, leading to case 2 local buckling.

- The cross-section would require the addition of diaphragms to prevent complete flattening. The nature of the shape also makes it difficult to add glue tabs with enough area to prevent glue shear.

Iteration 6: Variable height (Prototyping)

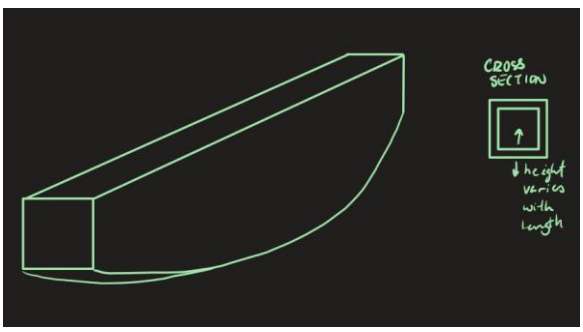

Figure 55: The isometric and cross-sectional view of the variable height prototype.

At this point, we felt that the ideas were quite conceptual, and we decided to use paper and glue stick to do some physical prototyping. The first design we tested was a bridge with variable height. The idea was that if the height matches the shape of the bending moment diagram, the shape in Figure 55, it would be a perfectly efficient use of material for this mode of failure. The viability of such a bridge is further confirmed by the existence of arch bridges in real life, though this design would be upside down. We then took this idea and used the spreadsheet and hand calculations to evaluate the design. (Our MATLAB code was not compatible with the varying cross section.)

We then used the CIV102 design workflow to model the concept under the specified train load and calculate the shear force envelope $V_{env}(x)$ and bending moment envelope $M_{env}(x)$. These envelopes are used to obtain the applied normal stress and shear stress. $\sigma_{top}(x)$, $\sigma_{bot}(x)$, $\tau_{cent}(x)$, and $\tau_g(x)$ along the span for the chosen geometry and second moment of area $I(x)$. We compared these requirements with the tensile, compressive, and thin-plate buckling capacity of cardboard materials and evaluated the corresponding FOS for each failure mode based on recommendations in the project manual. Since the bridge behaves more like a simply supported beam than a true arch (the supports do not provide much horizontal thrust), its internal forces remain predominantly bending. $\sigma = \frac{My}{I}$ is small, so much of the material contributes little to flexural capacity while still consuming our limited matboard area. At the same time, the upper portion of the box girder is in compression and is critical, because the specified compressive strength of the matboard (σ'_c = 6 MPa) is much lower than its tensile strength (σ'_t = 30 MPa). Thin plate buckling theory further indicates $\left(\frac{t}{b}\right)^2$, so the long, continuous compression panels in this concept have relatively low buckling capacity compared with the compressive stress predicted from $M_{env}(x)$. As a result, the minimum factor of safety for this concept was governed by flexural compression and local plate buckling and was only slightly above 1.0 for the base-case train, indicating limited reserve capacity.

What we learned:

- Though this design would do great in yield, the height would make the webs very likely to buckle under case 3 local buckling.
- The round shape of this bridge would make it difficult to place in the testing apparatus, and leaving openings on the ends would weaken the structure.
- The round shape of this bridge would make it difficult to place in the testing apparatus, and leaving openings on the ends would weaken the structure.

Iteration 7: Framed Box Girder with Discrete Square Cells

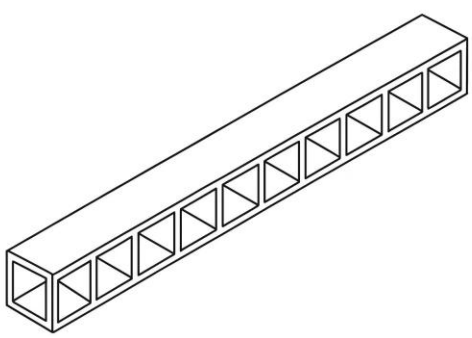

Figure 6: 2d model for framed box girder with discrete square cells

In this iteration, we explored a framed box girder made from a series of square paperboard frames spaced along the span. Each frame had the same outer dimensions as our target box girder, so at first we expected the bending performance to be similar while using less matboard. The interior of the girder was mostly empty, and the idea was that the square frames alone would carry both bending and shear.

After thinking more carefully about how the loads flow through the structure, we realized that this member behaves more like a ladder or a very open truss than a true closed box section. Between two frames, there is almost no material to transmit shear, so each frame works over only a short length of the span. As a result, the effective bending stiffness along the bridge is much smaller than for a continuous box girder with the same outer dimensions, even though the local cross-section of each frame looks efficient in isolation.

Iteration 8: Triangular Diaphragms (Prototyping)

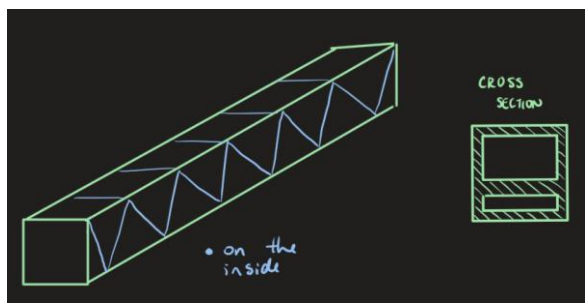

Figure 76: Isometric and cross-sectional view of horizontal triangular infill.

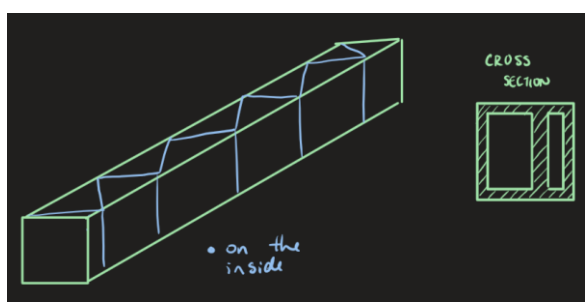

Figure 87: Isometric and cross-sectional view of vertical triangular infill.

Another idea we had involved using triangles on the inside of the bridge, with a profile very reminiscent of a truss bridge as seen in Figure 76. However, when this was built, we found it to be very weak in compression as the diaphragms buckled very easily in this orientation. But by chance, we also decided to test it on its side, the orientation depicted in Figure 8, and found that it was much stronger.

This design diverged from the design of the webs composed of square partitions. By the inspiration of changing the placement form of square partitions, we adjusted the placement angle of each square partition to form a series of triangular supports. Three partitions could form a two-triangle support. From a top view, the style of the web was similar to a series of small strings that were placed vertically on the base flange. Each oblique partition was directly connected with the top and bottom flanges by glue joints. The plates on the left and right sides of the girder were related to the top and bottom flanges, but not the triangular webs. The inspiration for this design was a geometric property of triangles. A triangle was the most stable geometric shape, because its angle of each vertex would not change, but the length of each side of the triangle would change, so we considered utilizing this property to build a stable girder.

Triangular web design formed a truss-like structure composed of short diagonal members. The structure mainly carried tension and compression of the natural axis, but not uniform shear in a wide panel. And this design reduced the risk of local buckling. The webs of girder preferred to be built slender under limited material, but it would make the compression area of the webs more prone to local buckling. Triangular webs replaced slender webs with multiple short and thicker members, which reduced the risk of local buckling for each compression member.

However, this design made the shear path no longer continuous, but the shear force was passing in a zigzag route between two flanges. This would make some force concentrate on the connection area of the webs and flanges. It would increase the risk of local bending in the flange plates, especially in the top flange, which was compressed. According to the Specification for Structural Steel Buildings published by American Institute of Steel Construction (AISC), if the concentrated load was on the web or the interaction between flange and web, it would seem like flange local bending and web yielding, and it confirmed that discontinuous shear path would cause local flange bending problem [3].

Since the triangular webs did not directly connect with side plates, the side plates did not carry diagonal forces, so the global stiffness and the resistance to the torsion of this girder were relatively low. This made the bridge more flexible and sensitive under large shear force or to eccentric loading.

And, the triangular web was like a truss. If we still used the basic and simple beam formula, $V = \tau A_{\text{web}}$, and the uniform shear assumption to explain and calculate the properties of the girder, the shear stiffness and shear capacity would be overestimated. The triangular web

was more like a repetitive truss than a uniform plate web in behaviour, so there were significant differences between the local behaviour of the slender truss and the equivalent continuous beam in the local area, especially in shear and torsion [4].

An accidental act, one of our teammates placed the paper model of the girder lying on its side, but not upright. We found that the girder model lying on its side was more stable and had higher compressive strength than when it was upright. So, we considered improving the current design by connecting the triangular webs to the side plates, but not the top and bottom flanges.

What we learned:

- Adding triangles on the inside of the bridge would not only add diaphragms to the inside, but also add a vertical rectangle with slightly greater thickness to the cross section, thereby increasing I.
- The triangles should be oriented such that they look like triangles from the top to minimize case 3 web buckling.

Final Design:

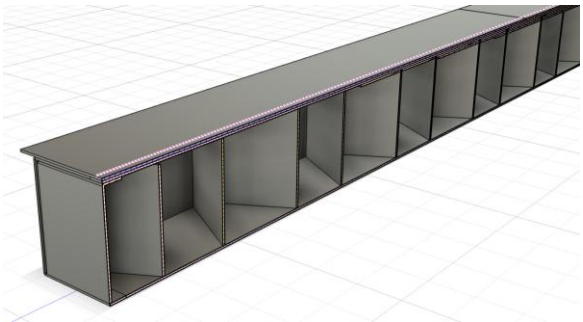

Figure 98: Section view of the final design, where the infill and flange are clearly seen.

For our final design, seen in 错误!未找到引用源。9,Figure 9, we decided to proceed with the triangular infill in a rectangular prism shape; however, we still liked the concept of having variable depth and decided to add layers of matboard to sections of the deck of the bridge to match the BMD's shape exactly. 错误!未找到引用源。0Figure 10

In accordance with iteration 3, to prevent local buckling, we used a height of 60 mm, which is the next allowable height, also below 80mm. In accordance with iteration 4, we decided to use 80mm as the width.

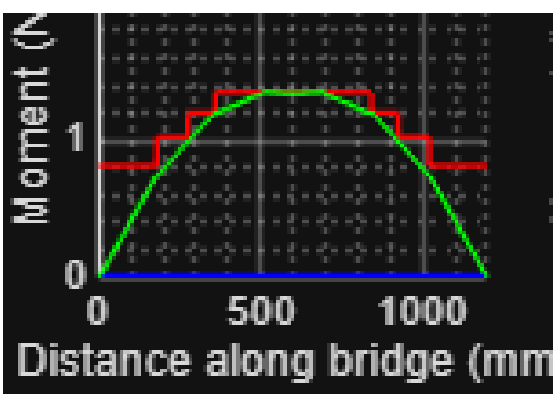

Figure 109: MATLAB-generated graph of yield tension/compression (red) and BMD (green). The lower red line is yielding due to compression, and the bridge will fail when the green line exceeds the boundary of the red line.

Therefore, we redistributed essentially the same plate area to the triangular beams below the deck. We concentrated the material on the upper and lower flanges and increased the total depth between them, which increased the second moment of inertia and reduced the maximum compressive stress on the upper flange within the same bending moment range. The diagonal web members subdivided the web into shorter panels, improving the buckling capacity of the thin plate and converting most of the shear force into axial tension and compression—an efficient use of material given the plate's relatively high tensile strength. This modified configuration still met the project's size and material constraints but yielded higher flexural and buckling capacities, as well as a larger minimum safety factor, when recalculating the requirements to capacity ratios for all failure modes. For these reasons, our team ultimately shifted from the initial solid curved box girder design to the final truss box girder design to utilize the existing plate more efficiently and reliably.

References

[1] J. Lee and Y. J. Kang, "Elastic local buckling coefficients of I-shaped beams considering flange–web interaction," *Thin-Walled Structures*, vol. 195, p. 111325, Nov. 2023, doi: 10.1016/j.tws.2023.111325.

[2] J. J. O. Pedro, S. Nascimento, and C. Hendy, "Shear buckling resistance models for plate girders – Review and improvements," *Engineering Structures*, vol. 307, p. 117857, Mar. 2024, doi: 10.1016/j.engstruct.2024.117857.

[3] F. S. Roland, PPI Steel Design for the PE Civil and SE Exams, 3rd Edition – A complete guide for the NCEES PE Civil and SE exams. PPI, a Kaplan Company, 2018.

[4] B. Li, Y. Wang, Y. Liu, J. Tao, H. Ren, and H. Yang, "Equivalent continuum modeling for flexible slender quadrilateral truss structure," *Machines*, vol. 12, no. 2, p. 111, Feb. 2024, doi: 10.3390/machines12020111.

Appendix

See the GitHub repository here for MATLAB code and CAD files